Intelligent temperature controller manual

Brief

This temperature controller is multi-input with SMT technology, stable performance. Special auto-turning and intelligent control function.

Main technology

●Input

All the thermocouple(TC), thermal resistance(RTD) or standard current or standard voltage(show as the input table)

●Accuracy

Measure accuracy: ±0.5%FS
Cold terminal compensation error: ±2℃
(can be correct by software within 0~50℃
Resolution: 14Bit
Sampling time: 0.5Sec

●Display

Process value(PV), Setting value(SV): -1999~+9999
Output, alarm, auto-turning statues: LED

●Control output

1. Relay output: contact capacity: 250VAC 3A(Resistance load)
2. Voltage plus output: 0~12V(suitable for SSR)
3. Alarm function output: one output with 5 type.
4. Output contact capacity; 250VAC 3A(resistance load)

● Connection

	Size (mm)			Hole Size (mm)	
	height	width	length	height	width
ST504	48	48	70	45	45
ST506	96	48	70	92	45
ST508	48	96	70	45	92
ST507	72	72	70	68	68
ST509	96	96	70	92	92

●Panel symbol and function

NO	Face board description	Content description
1	PV	Measured present value/mode displayed value
2	SV	Setting value/mode content displayed value
3	OUT1	Output 1 indicating light
4	AT	PID automatic calculating light
5	ALM1	Alarm 1 indicating light
6	▲	Addend key
7	▼	Subtrahend key
8	<	Phase shift key
9	SET	Set/mode key

Operation step:

●SV Setting

Under the SV/PV display status, press “SET” key, the SV will be flash, then press “<” to located the position of temperature, press the UP or DOWN key to set the temperature which you want. After that, press “SET” again, the device will back to SV/PV display status.

●Setting range

Setting value(SV): SAME AS PV
Proportion(P): 0~Full range(when P=0, it is ON/OFF control)
Integral (I): 0~3600Sec(when I=0, it is no integral)
Differential (D):0-3600Sec(when D=0, it is no differential)
Proportion cycle:1-100Sec
ON/OFF control output width: 1~100℃(or other PV value)

●Others

1. Isolation resistance:>50M(500VDC)
2. Isolation strength: 1500VAC/1min.
3. Power consumption:<10VA
4. Work environment: 0~50℃，30~85%RH no corrosive gas
5. Weight: about0.5KG

Wire diagram(as showed on the products)

●Wire Diagram

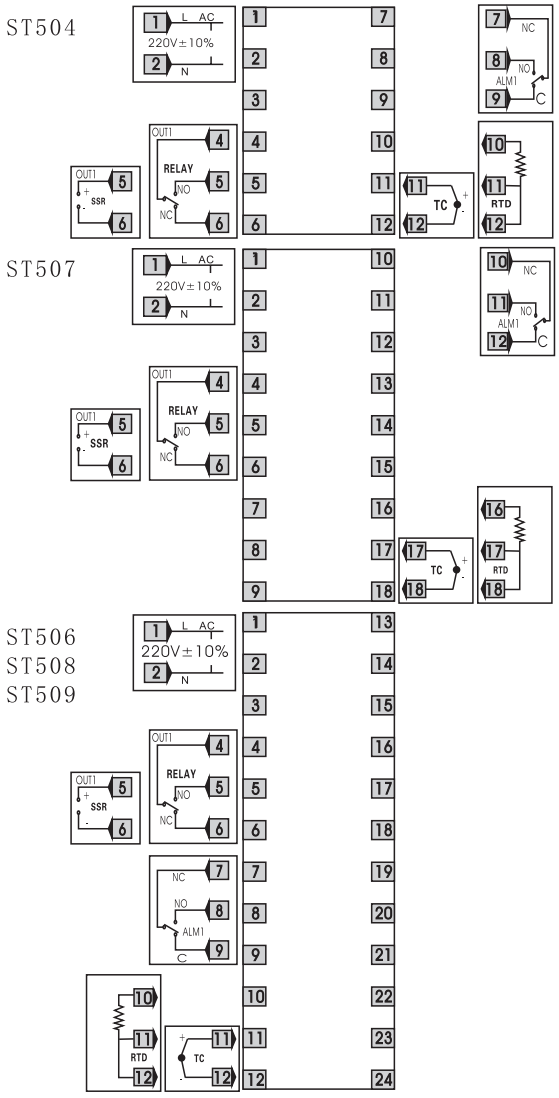

●Parameter setting model

Second menu: Press “SET” key for four seconds, enter to second menu

Signal	Name	Description	Setting range	Value leaving factory
AL1	Alarm 1 Setting	Set the value of alarm 1	Whole measured range	30.0 or 30
ATU	Adjustment automatic	Make sure ATU open/closed	0：closed ATU 1：open ATU	0
P	Proportional band (heat)	Set the value of proportion	0-Wholemeasured range: when 0, means ON/OFF control	30 or 3.0 (see*1)
I	Integral time (Sec)	Set integral time to eliminate the error of proportional band	0~3600（Sec）: When 0, no integral time effect	240
D	Derivative time (Sec)	Set derivative time to avoid the fluctuation of output	0~3600 (Sec) When 0, no derivative time effect	60
Ar	Limit the effective range of integral activity	Prevent integral activities exceed the limit or be deficient	Proportional band 1-100% (heating)	100
T	Proportional term (refrigerating)	Setting t refrigerating's proportional term	1~100 sec (can't be 0) no display when current output	see*3
SC	Procedure deviation value	Sensor's measured value add this value is to be the PV	leave out	0 or 0.0
OH	leave out	Main control no action width	leave out	2
LCK	Setting the function of data’s lock	Make the data change validity or invalidity	see*3	0000

*1. When P≠0, the device is PID control, the value of “I, D” need to be set reasonable. At the first time, you can open the “AT” function. When P=0, the device is ON/OFF control, you need to set the value of “OH”

*2. Data lock select

Setting	Protect range of different lock levels
0000	SV and the whole parameters can be set
0001	Just SV、AL1 can be set
0003	Just SV can be set
0004	SV and all the parameters can't be set

Third menu parameter mode setting

●LCK=90 enter third menu

Signal	Setting value	Description	Measure range
SL1	0 0 0 0	K	0~1372℃
	0 0 0 1	J	0~1200℃
	0 0 0 2	R	0~1769℃
	0 0 0 3	S	0~1769℃
	0 0 0 4	B	0~1820℃
	0 0 0 5	E	0~800℃
	0 0 0 6	N	0~1300℃
	0 0 0 7	T	0~-200-400℃/-199.9-400.0℃
	0 0 0 8	Pt100(H)	-200~650℃
	0 0 0 9	Pt100 (L)	-199.9~200℃
	0 0 1 0	Pt100 (4)	-80~430℃
	0 0 1 1	Cu50	-50-150℃
	0 0 1 2	0-10mA, 4-20Ma, 0-5V, 0-10V.	-1999~9999
SL2	0 0 0 0	leave out	
SL3	0 0 0 0	leave out	
SL4	0 0 0	Not set Alarm 1 yet	Alarm 1 (ALM1) types selection
	0 0 1	Upper limit deviation alarm	
	0 0 2	Upper/lower limit deviation alarm	
	0 0 3	Alarm(Alarm in the range)	
	0 0 4	Procedure value upper limit alarm	
	0 0 5	Lower limit deviation alarm	
	0 0 6	Procedure value lower limit alarm	
SL8	0 0 0 0	Celsius degree	
	0 0 0 1	Fahrenheit degree	

Forth menu parameter model setting

●LCK=190 enter forth menu

Symbol	factory value	note	setting range
SLH	as order information	upper limit of setting value	see as above
SLL	as order information	upper limit of setting value	see as above
PGdP	0	position of decimal	0-3
AH1	2or2.0	the first alarm no action width	0-100 or 0.0-100.0
dF	1	digital filtering constant	0-100
CODT		display suppression	0. 4

Maintenance

●If the device broken within 12month caused by the quality problem, we repair it with our charges. If the device broken by the customer, the repair charged by customer.

●The device have to install with no corrosive gas, dry, and free wind.